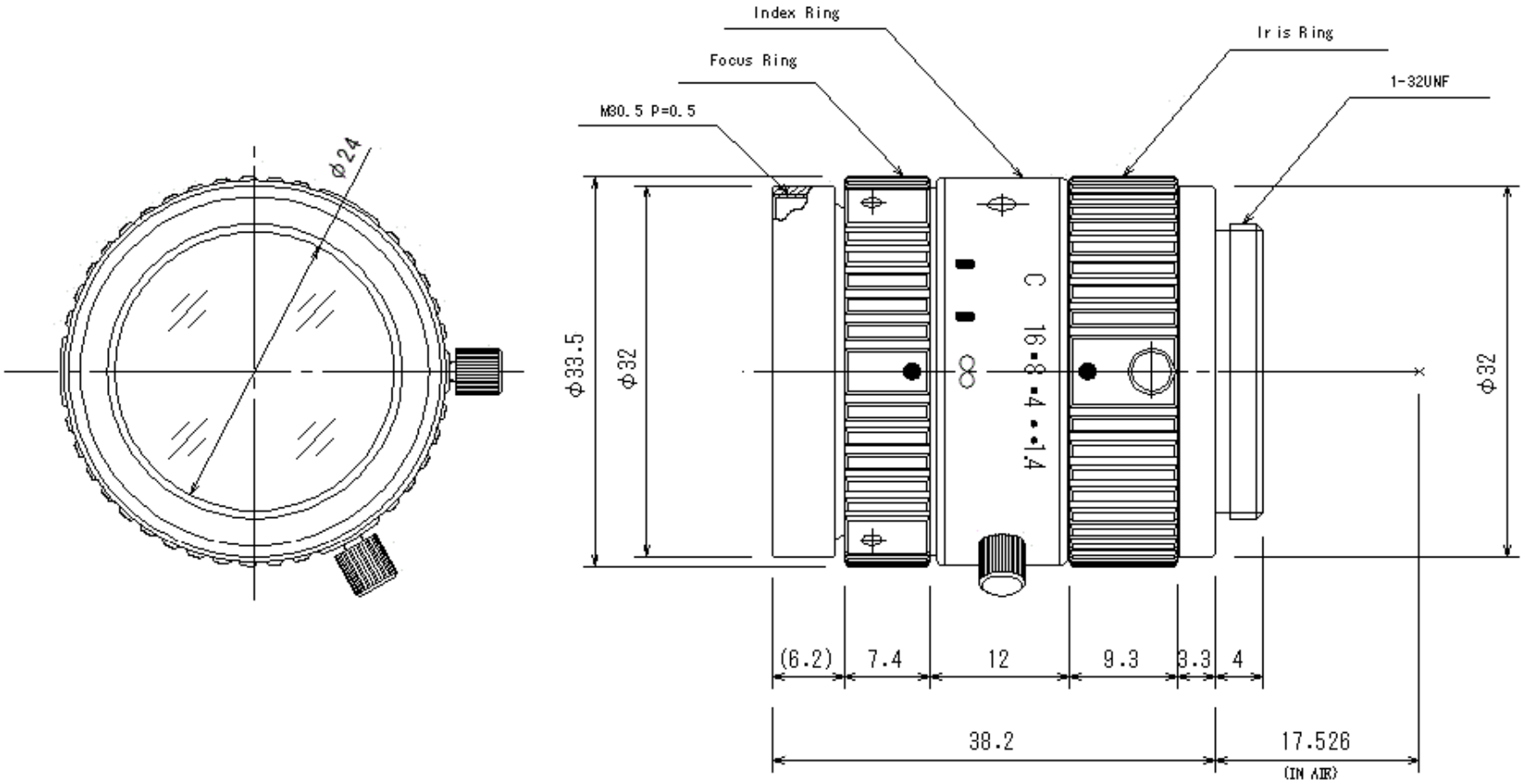
Index Ring
Focus Ring
M30.5 P=0.5
Iris Ring
1-32UNF
φ24
φ33.5
φ32
φ32
C
16
8
4
1.4
(6.2)
7.4
12
9.3
3.3
4
38.2
17.526
(IN AIR)