CS4K-3611V

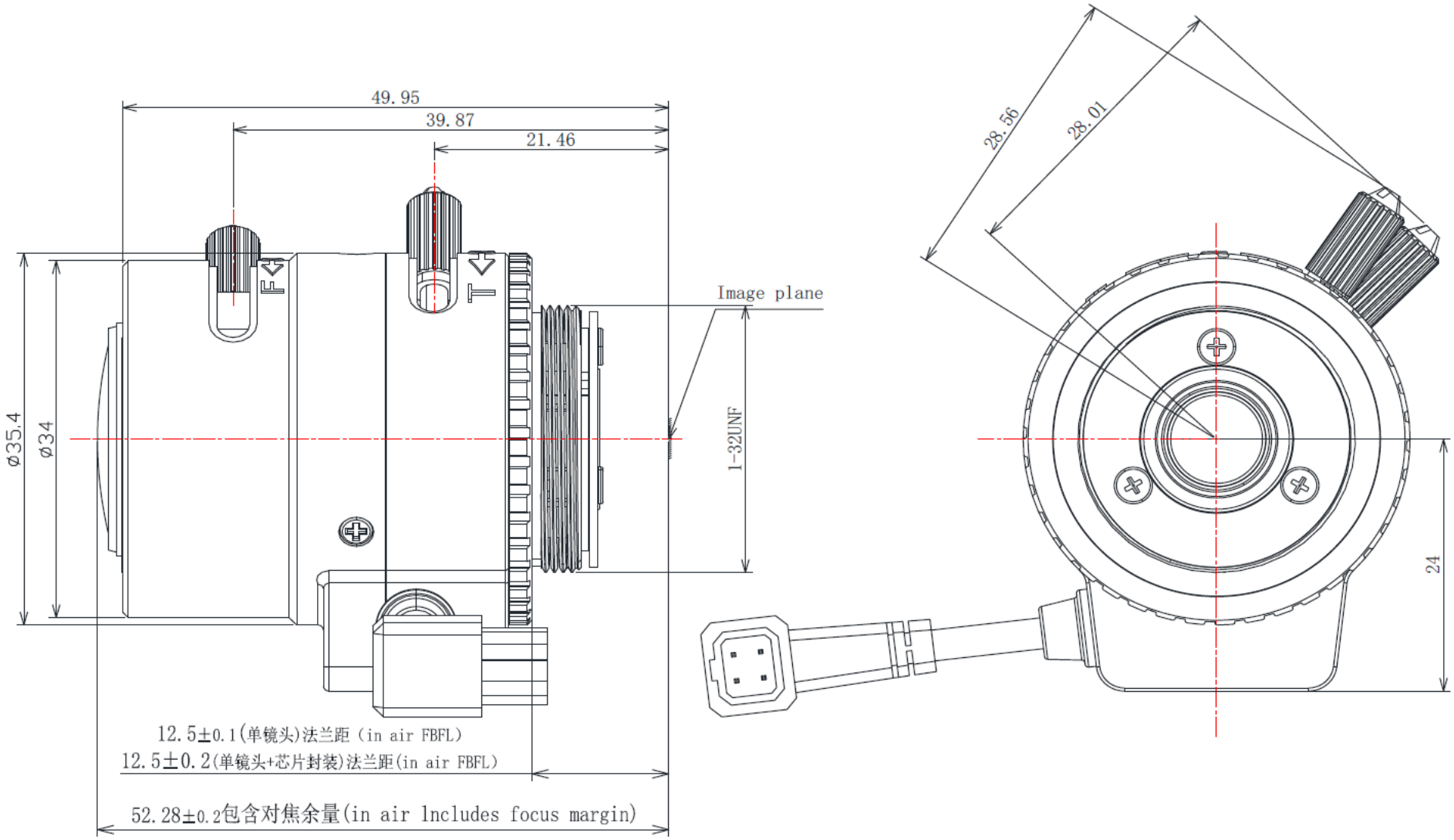
49.95
39.87
21.46
28.56
28.01
Image plane
ø35.4
ø34
1-32UNF
24
12.5±0.1(单镜头)法兰距 (in air FBFL)
12.5±0.2(单镜头+芯片封装)法兰距(in air FBFL)
52.28±0.2包含对焦余量(in air Includes focus margin)