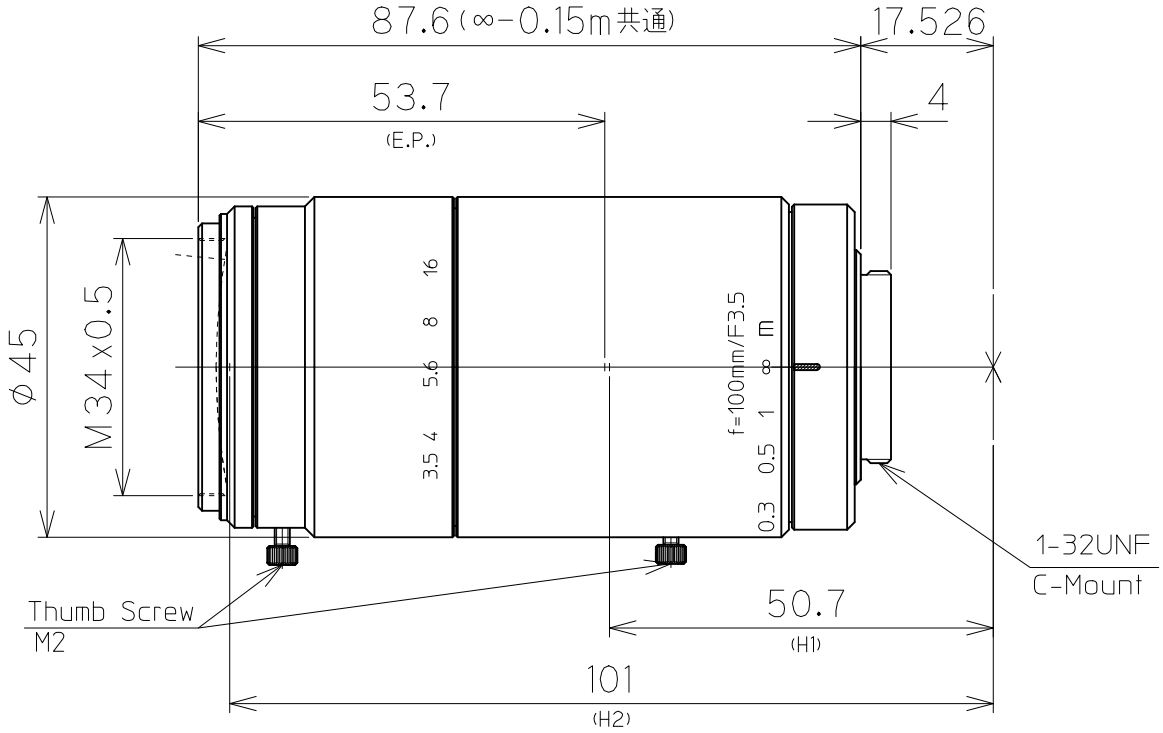

1.1" 3.5/100mm C		1.1"	1"	2/3"
FOCAL LENGTH		f=100mm		
F-NUMBER		F=3.5-16		
PICTURE SIZE		10.6x14.1mm	9.6x12.8mm	6.6x8.8mm
ANGLE OF VIEW (∞)	VER. ANGLE	6.0°	5.4°	3.7°
	HOR. ANGLE	7.9°	7.2°	5.0°
	DIA. ANGLE	9.9°	9.0°	6.2°
DISTORTION (TV)		0.26%	0.23%	0.12%
FIELD OF VIEW (MINIMUM FOCUS DISTANCE)	VER.	14mm	13mm	8.8mm
	HOR.	19mm	17mm	12mm
	DIA.	23mm	21mm	15mm
MINIMUM FOCUS DISTANCE		0.15m		
FLANGE BACK		17.526mm in air		
BACK FOCUS		21.1mm in air		
FILTER SCREW SIZE		M34.0x0.5		
FRONT/REAR EFFECTIVE DIA.		FRONT φ28.5mm	REAR φ19.0mm	
MOUNT		C-MOUNT		
EXIT PUPIL		-101.7mm		
TEMPERATURE RANGE		-10~+50°C		
STORAGE TEMPERATURE RANGE		-20~+60°C		
RESOLUTION CENTER/CORNER		CENTER 200lp/mm	CORNER 100lp/mm	
WEIGHT		260g		

NOTE:Specifications and availability are subject to change without notice

注）本仕様については、予告なしに変更する場合があります。

		尺度 1/1	工場番号 LM100FC
		機種名 1.1" F3.5 f=100mm	
2022.11.30	作成年月日	機種番 LM100FC24M 外観図	